Wind Tunnel Improvement and Instrumentation

Joseph T. Read

Supervisors: Dr. Mesbah Uddin and Brett Peters

Abstract

Grainger. W.W. Grainger, Inc., 2013. Web. 2013.

- ¼ scale NASCAR Cup-car
- Modular test section
  - Easy
  - Inexpensive

AeroDyn Wind Tunnel. AeroDyn, 2013. Web. 2013.

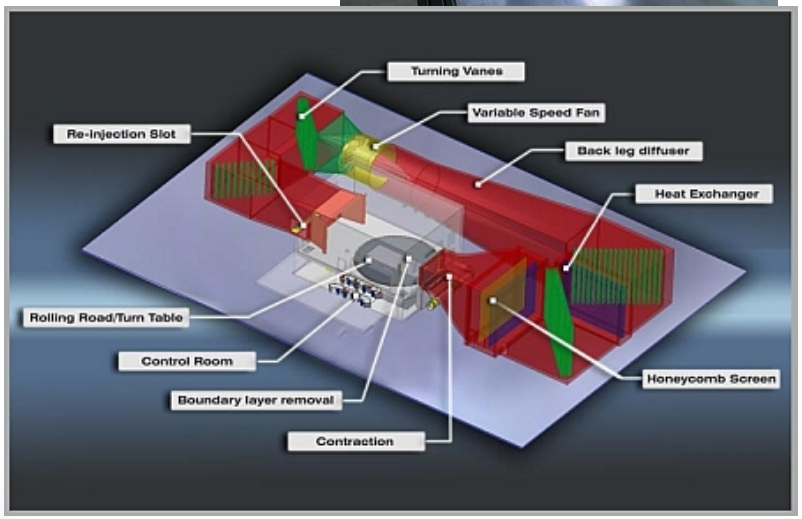

Windshear Inc., Wind Tunnel. Windshear Inc., 2010. Web. 2013.

- Particle Image Velocimetry (PIV)
- Constraints
  - Space
  - Power Availability
  - Cost

What is a Wind Tunnel?

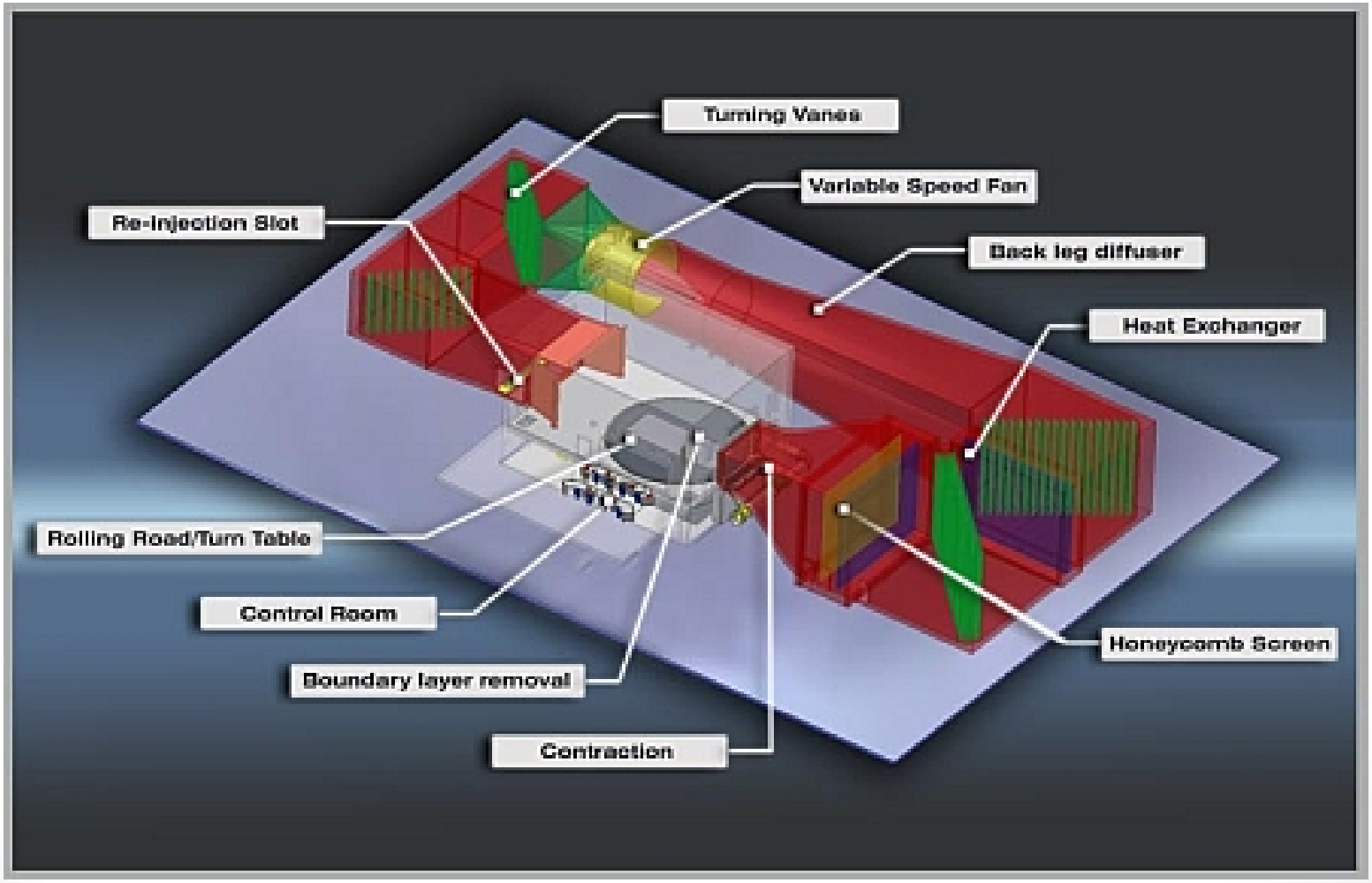

Windshear Inc., Wind Tunnel. Windshear Inc., 2010. Web. 2013.

“First Things First”

- Fluid Dynamics Fundamentals
- Bernoulli’s Equation

$$p + \frac{1}{2}\rho V^2 + \gamma z = constant\ along\ streamline$$

- Terminology
- NASA

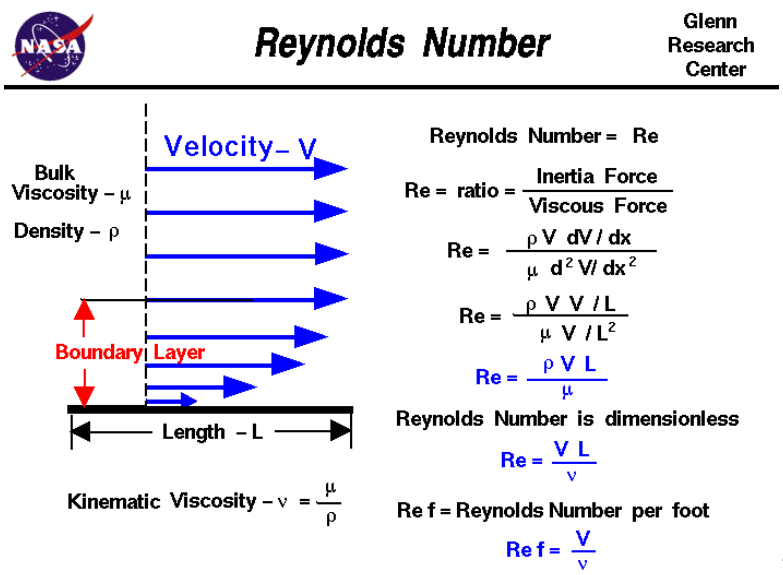

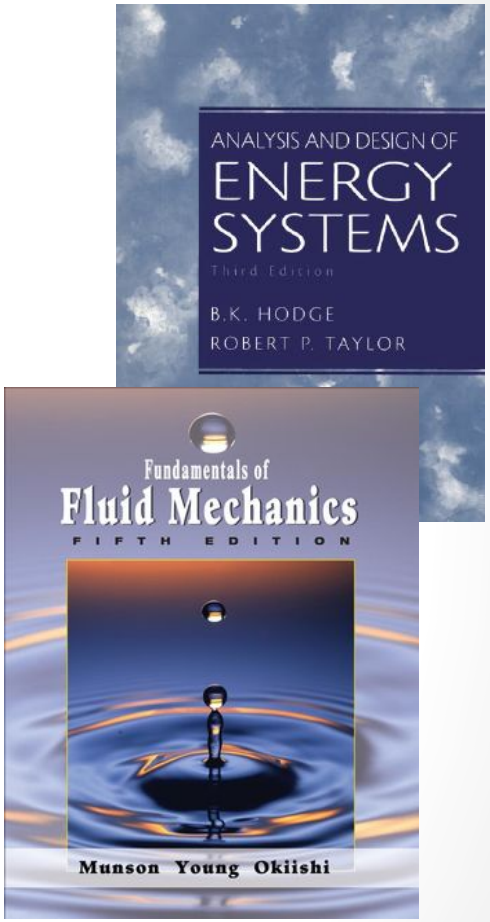

National Aeronautics and Space Administration. NASA, 2012. Web. 2013

Methodology

- Knowns
- Calculations
  - Velocity
  - Blockage
  - Test CSA
  - CFM
  - Pressure
  - Power
- Excel and MathCAD

Velocity vs. Horsepower Comparison		
Velocity (mph)	Horse Power Required	Tolerance (±)
90	11.4	1.5
100	15.6	2.1
110	20.8	2.8
120	27.0	3.6
130	34.3	4.6
140	42.9	5.8
150	52.7	7.1
160	64.0	8.6
170	76.8	10.4
180	91.1	12.3
190	107.2	14.5

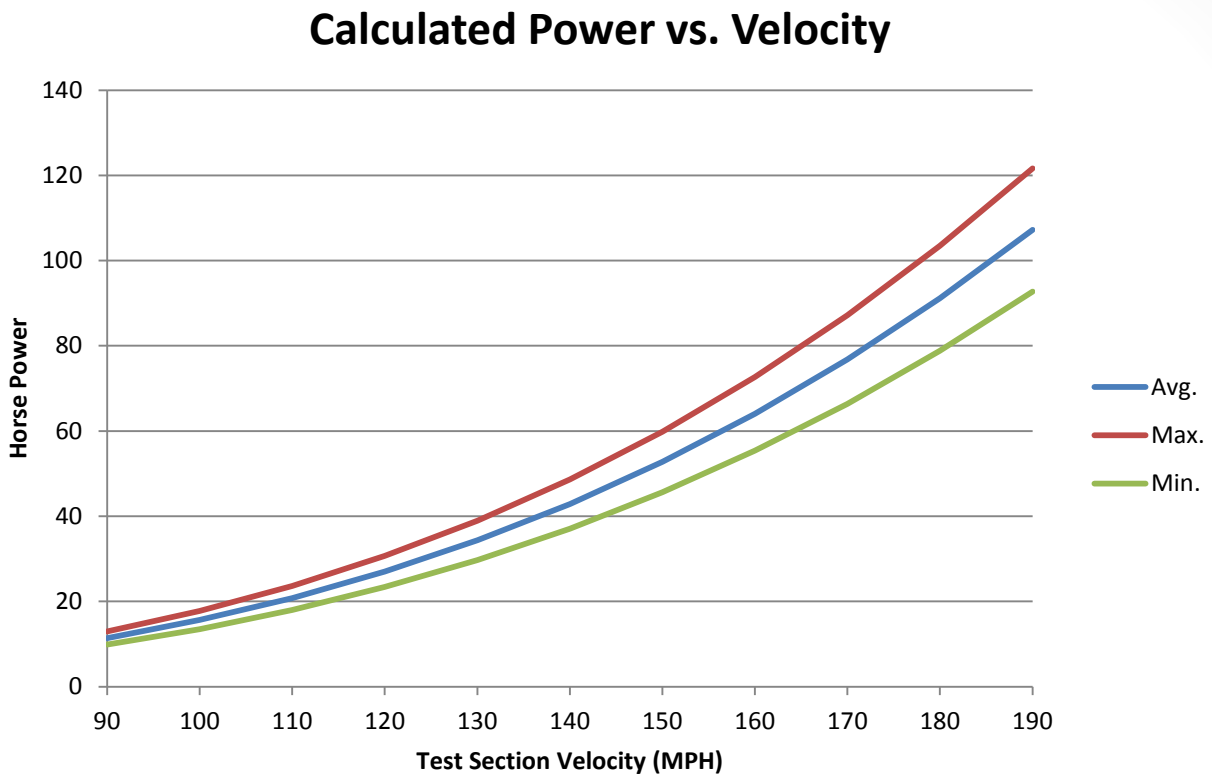

Velocity vs. Horsepower Comparison		
Velocity (mph)	Horse Power Required	Tolerance (±)
90	11.4	1.5
100	15.6	2.1
110	20.8	2.8
120	27.0	3.6
130	34.3	4.6
140	42.9	5.8
150	52.7	7.1
160	64.0	8.6
170	76.8	10.4
180	91.1	12.3
190	107.2	14.5

Design Analysis

- The Tunnel
  - Closed Return
  - Square Ducting
  - Radius of Curvature
  - Blockage Ratio
- Existing Constraints
  - Space availability
  - Pre-Existing motors
  - Electrical power

S.B. Amirault. *Engineering-References*. S.B.A. Invent, 2013. Web. 2013.

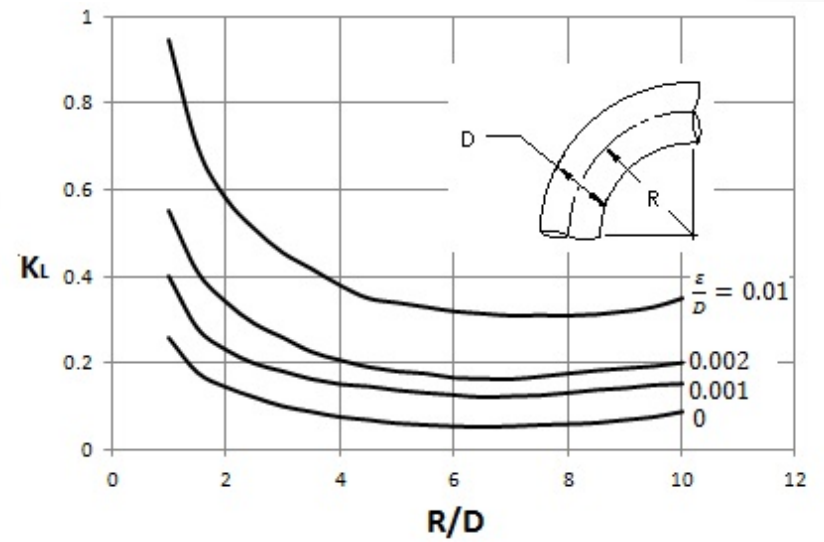

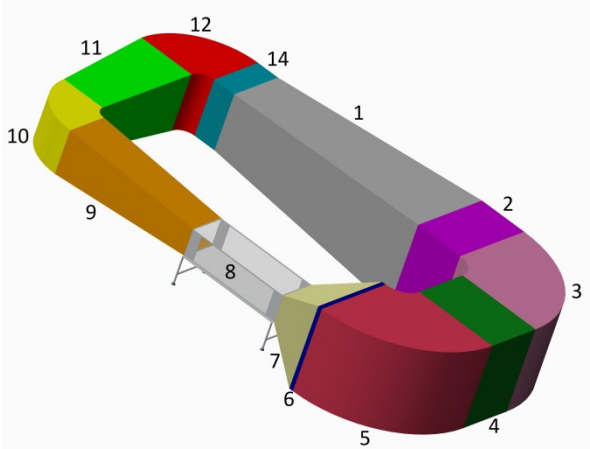

Wind Tunnel CAD Color Model (color-to-component table coming up).

Diffusing and Contracting

- Diffuser
  - Reduces speed increases area
  - Angle of 7˚ (optimal for pres. rise)
- Contraction Nozzle
  - Increases speed reduces area
  - Angle of 60˚ (optimal for space)

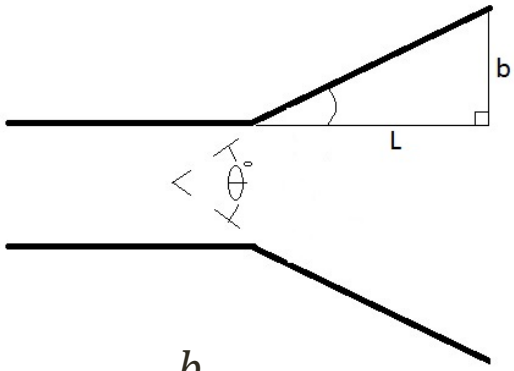

$$L = \frac{b}{\tan(\frac{\theta}{2})}$$

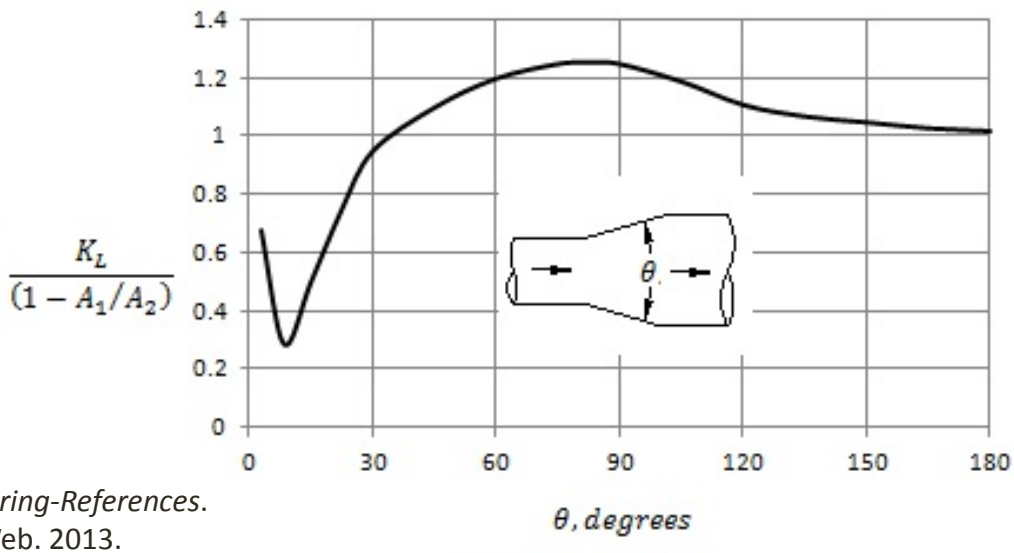

S.B. Amirault. *Engineering-References*. S.B.A. Invent, 2013. Web. 2013.

Pressure and Power Calculations

Pressure Rise Across Fan Calculator						
Location	H. Loss (ft.)	Pres. Rise (PSI)	Power (Hp)	Test Section Drag (Quarter Scale Car Area)		
3	4.2105	0.0022	0.9833		Min.	Max.
4	0.0006	0.0000	0.0001	Force (lbf)	27.0837	81.2512
5	4.2105	0.0022	0.9833	Pressure (PSI)	0.0076	0.0228
7	88.6430	0.0471	20.7012	Power (Hp)	13.3613	40.0839
8	80.0749	0.0425	18.7003			
9	57.1598	0.0304	13.3488		Req. Hp	Tolerance (+ or -)
10	55.4267	0.0294	12.9441		98.9493	13.3613
12	19.5487	0.0104	4.5653		Req. PSI	Tolerance (+ or -)
14	0.0010	0.0000	0.0002	Total PSI	0.1795	0.0152
Total	309.2757	0.1643	72.2267			

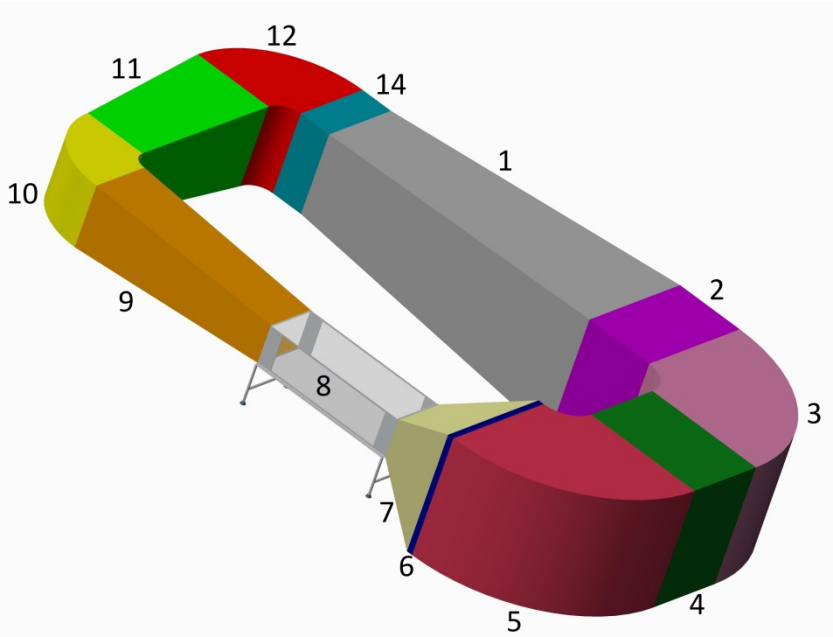

Location	Color	Component
14	Teal	Fan Duct
1	Dark Grey	Diffuser
2	Purple	Duct
3	Pink	Corner Duct
4	Dark Green	Duct
5	Burgundy	Corner Duct
6	Navy	Flow Straightener Duct
7	Beige	Contraction Nozzle
8	Light Grey	Test Section
9	Orange	Diffuser
10	Yellow	Corner Duct
11	Green	Diffuser
12	Red	Corner Duct

Results

- Final values
  - 185 mph
  - 25% blockage
  - 99 ± 13 Hp
  - 101,000 CFM
  - 5″ ± .5″ w.g.
- Solutions
  - Content with lower velocity
  - Single larger fan
  - Fans in series
  - Fans in parallel

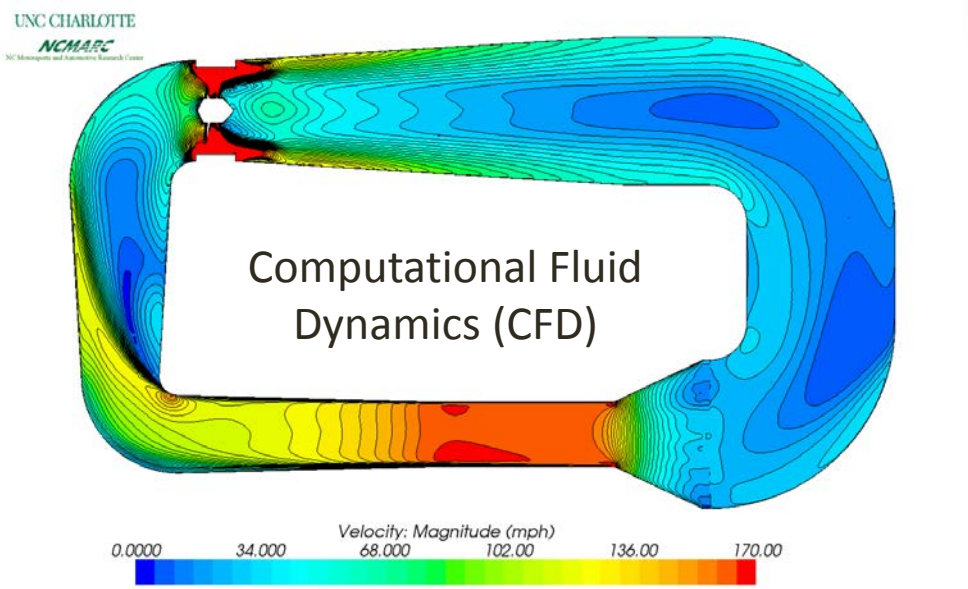

Series

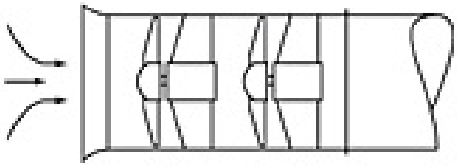

Parallel

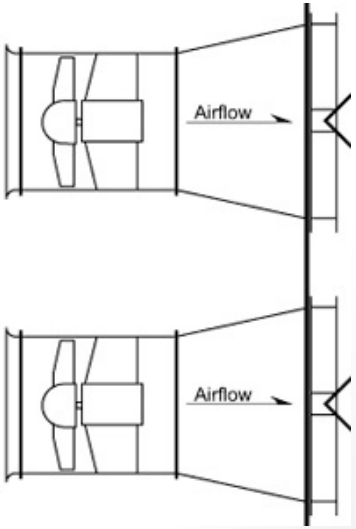

Greenheck. Greenheck Fan Corporation, 2013. Web. 2013.

Future Installations

- Modular Test Section
  - Particle Image Velocimetry (PIV)
  - Automotive Calorimeter
  - Hot Wire Anemometer
  - Wake Probes
  - Pitot Tubes
  - Load-Cells
  - Rolling Road
  - Smoke Generator
  - Heat Exchanger

PIV

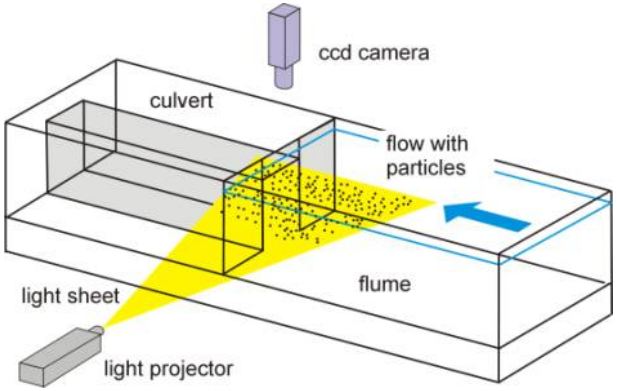

Federal Highway Administration. U.S. Department of Transportation, 2011. Web. 2013.

Rolling Road

Windshear Inc., Wind Tunnel. Windshear Inc., 2010. Web. 2013.

Hot Wire

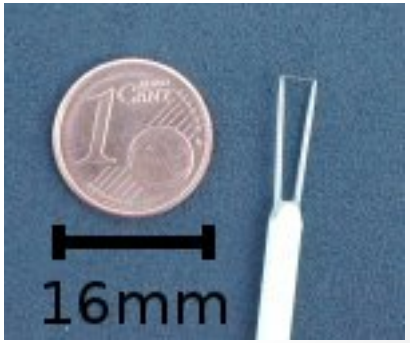

Wikipedia. Wikipedia Free Encyclopedia, 2007. Web. 2013.

Conclusions

- Identify constraints
  - Time efficient
  - Economic
- Organization
  - Microsoft Excel
  - MathCAD

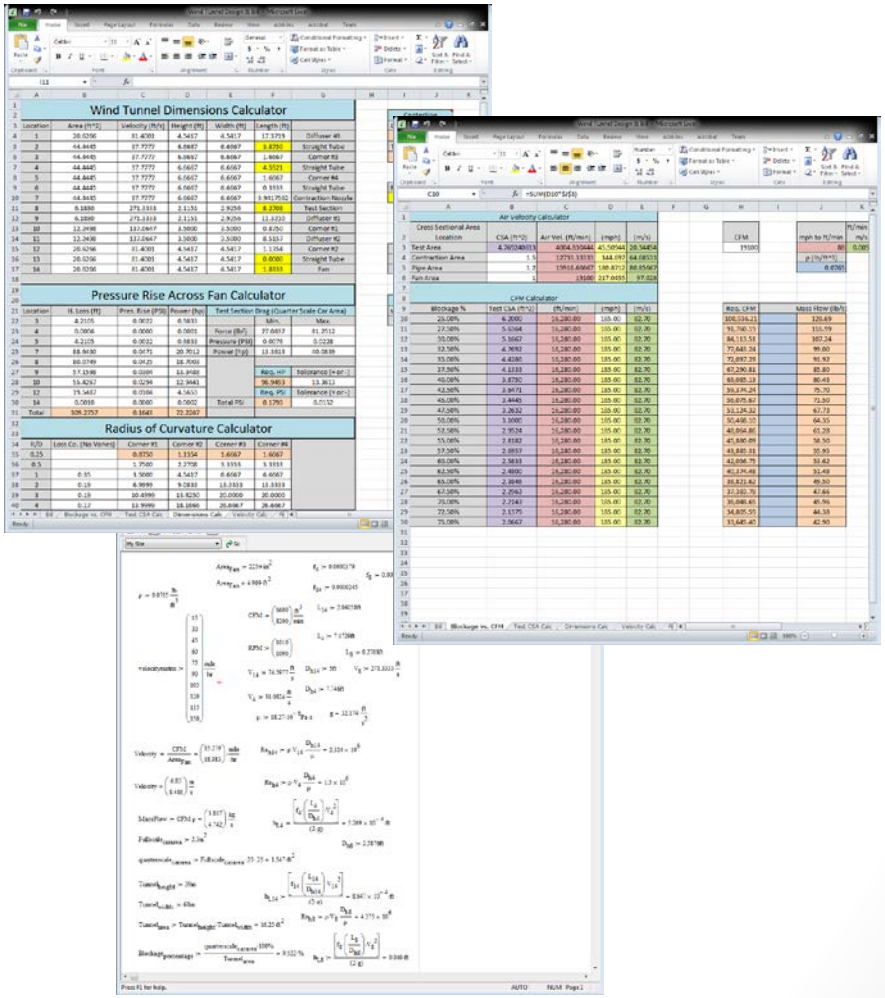

Special Thanks

- Dr. Mesbah Uddin
- Brett Peters
- UNC Charlotte SREU Program

Facebook. SRT Viper, 2013. Web. 2013.

References

- *AeroDyn Wind Tunnel*. AeroDyn, 2013. Web. 2013.
- Amirault, S.B. *Engineering-References*. S.B.A. Invent, 2013. Web. 2013.
- *Federal Highway Administration*. U.S. Department of Transportation, 2011. Web. 2013.
- *Grainger*. W.W. Grainger, Inc., 2013. Web. 2013.
- *Greenheck*. Greenheck Fan Corporation, 2013. Web. 2013.
- Hodge, B.K., and Robert P. Taylor. *Analysis and Design of Energy Systems Third Edition*. Upper Saddle River: Prentice Hall, 1999. Print.
- *National Aeronautics and Space Administration*. NASA, 2012. Web. 2013.
- Okiishi, Munson Young. *Fundamentals of Fluid Mechanics Fifth Edition*. Ames: John Wiley & Sons, Inc., 2006. Print.
- *Wikipedia*. Wikipedia Free Encyclopedia, 2007. Web. 2013.
- *Windshear Inc., Wind Tunnel*. Windshear Inc., 2010. Web. 2013.